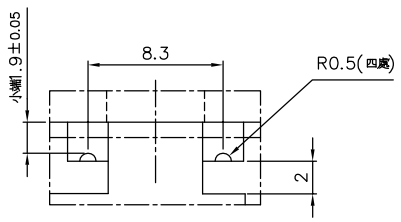

F DETAIL(S=3:1)

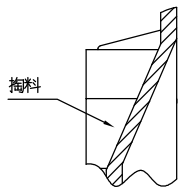

E–E SECTION

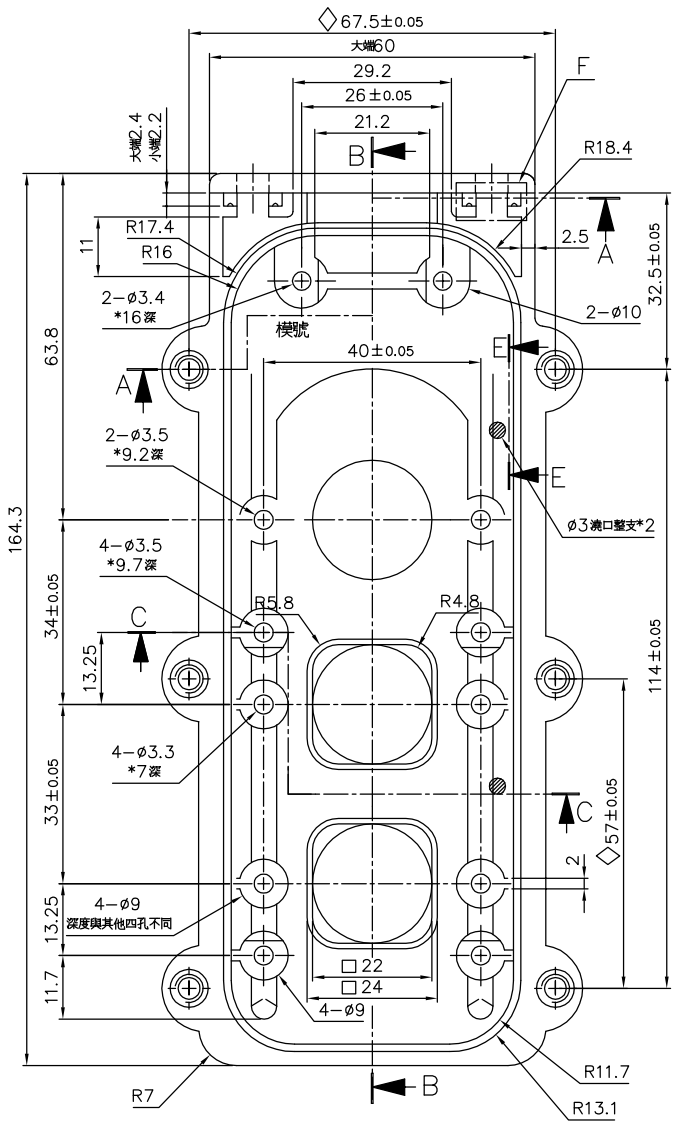

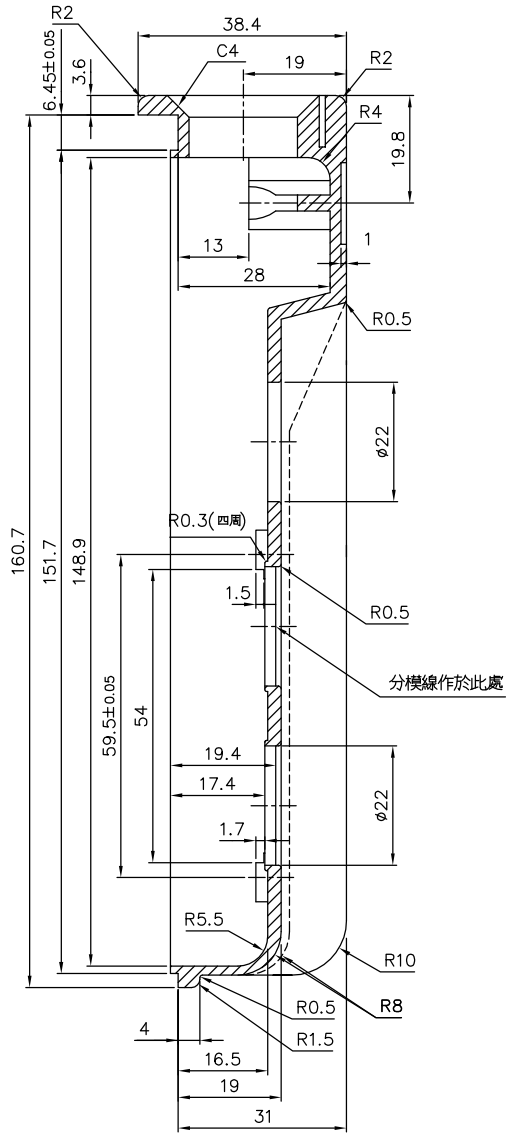

B–B SECTION

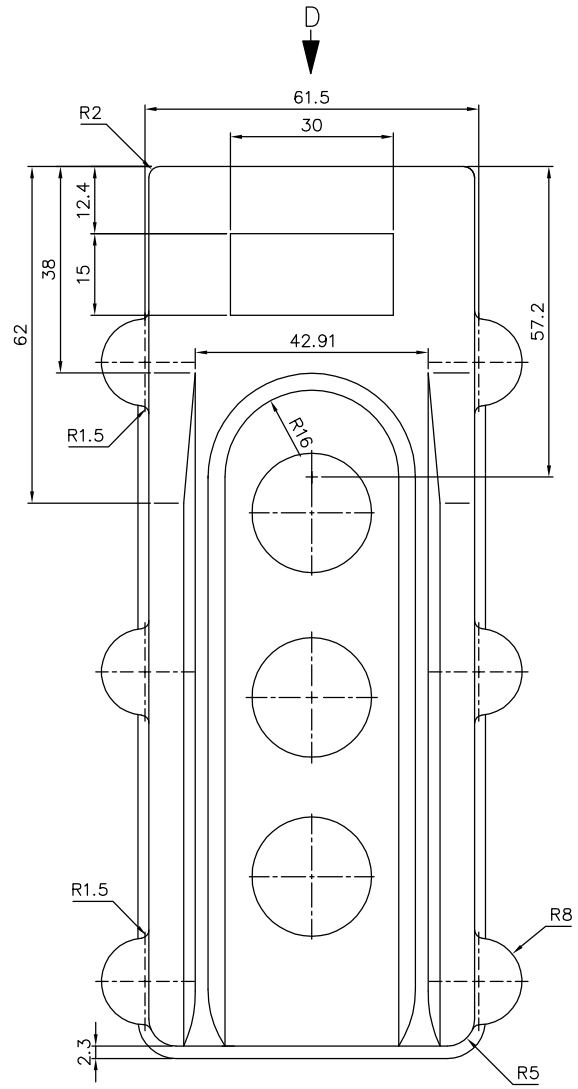

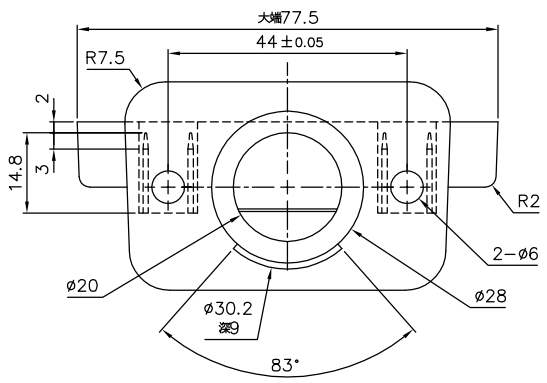

D VIEW

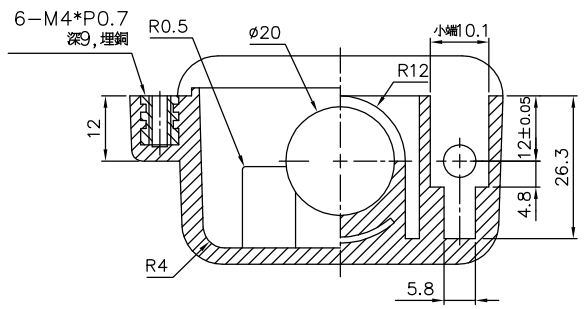

A–A SECTION

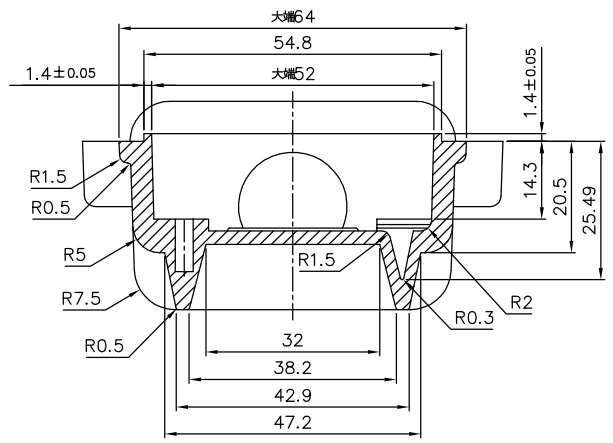

C–C SECTION

TEND TECHNOLOGY CO.,LTD.	TOLERANCE	30mm Down: ±0.25 30.1~60mm: ±0.4 60.1~300mm: ±1			TOOL MATERIAL		TOOL FINISH		TOOL CAV		UNIT	mm	MATERIAL	A.B.S.	DRAWING NO	9HS8208
	NEW REVISION		QUALITY	Hung 2008.07.29	APPROVED BY	Summer 2008.07.29	CHECKED BY	Dennis 2008.07.29	DRAWN BY	Kevin 2008.07.29	SCALE	1:1	FINISH		DRAWING NAME	82 COVER
	LAST REVISION										THIRD ANGLE PROJECTION		COLOR	ORANGE		

Rev : A

/9/THS/82/9HS8208_eng.dwg